	Refrigerated Air Dryer for High Temp.	Rev.	Date	Prepared By	Checked By	Approved By
GSA Global Standard Air & Gas		A	2020.09.23	WOO.I.H.	JO.S.J.	KIM.H.W.
		B				
	Water Cooled Type	C				
		D				

Project Name	-	Model Name	HYD-800HTW

1	**SPECIFICATION**				
2	Supply Voltage	380V	Inlet Flow Rate	120	Nm3/min
3	Phase	3PH	Inlet Pressure	7	barg
4	Frequency	60Hz	Inlet Temperature	45	℃
5	Control use	220V	Outlet Flow Rate	120	Nm3/min
6	Fulid	Compressed Air	Outlet Pressure	6.8	barg
7	Location	Indoor	Outlet Temperature	33±5	℃
8	Design Code	Maker STD.	Pressure Drop	0.2	bar
9	Area Class	Non-Hazardous	Outlet Dew Point	2~10	°C@PDP
10	Cooling Water Capacity	267 L/min	Design Pressure	9.7	barg
11	Cooling Water Pressure	2 ~ 3 barg	Design Temperature	70	℃
12	Cooling Water Temperature	32 ℃	Ambient Temperature	32	℃
13	**CONSTRUCTION**				
14	Refrigerant	R-22	Dimension (W x L x H)	1,500 X 2,100 X 2,150	mm
15	Ref. Compressor Type	Scroll	Weight	1,250	kg
16	Ref. Compressor Capacity	25 HP	Power Consumption	23.2	kW
17	Condenser Type	Water Cooled	Inlet Connection	200A	KS 10K SO.FF.
18	Condenser Capacity	25 HP	Outlet Connection	200A	KS 10K SO.FF.
19	Heat Exchanger Type	Block	Cooling Water Connection	50A	PT Union
20	Heat Exchanger Material	Aluminum	Drain Connection	15A	PT Female Screw
21	Ref. Control Device	TEV	Color (Munsell)	5.7PB 4.1/9.9	
22	Temp. Control Device	Hot Gas Bypass Valve		5.7PB 2.9/3.5	
23	Drain Trap Type	Level Sensor			
24	**STANDRAD FEATURES AND CONTROL**				
25	Ref. Compressor	YES	Auto Drain	YES	
26	Water Cooled Condenser	YES	Hot Gas Bypass Valve	YES	
27	Cooling Water Regulating Valve	YES	Suction Line Accumulator	YES	
28	Liquid Ref. Receiver	YES	Oil Separator	YES	
29	Filter Dryer	YES	Ref. Pressure Switch	NO	
30	Expansion Valve	YES	4.3" TFT LCD	YES	
31	Heat Exchanger	YES	PCB Controller	YES	
32	Ref. Pressure Transmitter	YES			
33	Air Pressure Gauge	YES			
34	Ref. Pressure Gauge	YES			
35	**NOTES**				
36					
37					
38					
39					
40					
41					
42					
43					
44					
45					
46					

DWG NO. GSA-HYD-0800HTW-01

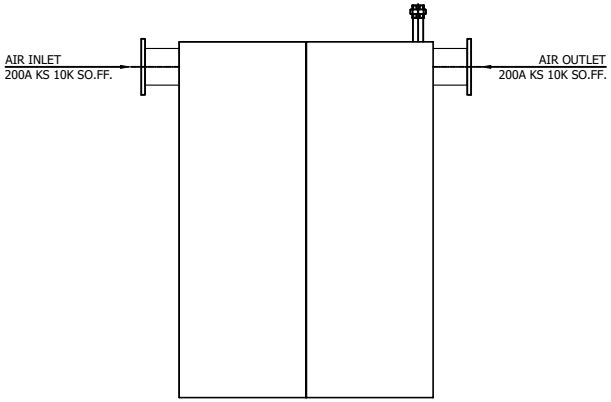

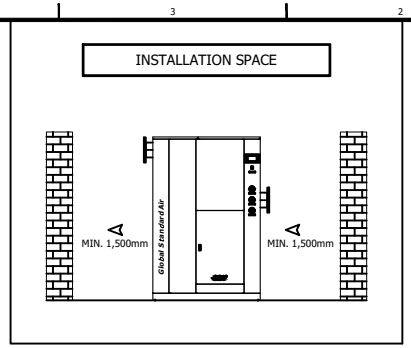

SPECIFICATION	
INLET TEMPERATURE	45°C
AMBIENT TEMPERATURE	32°C
INLET AIR PRESSURE	7 barg
CAPACITY	120 Nm^3/min
AIR IN/OUT CONNECTION	200A KS 10K SO.FF.
C.W. IN/OUT CONNECTION	PT 50A
C.W. TEMP. / PRESSURE	32°C / 2 ~ 3 barg
DIMENSION(WXDXH, mm)	1,500 X 2,100 X 2,150
WEIGHT	1,250 kg
POWER CONSUMPTION	23.2 kW
POWER SUPPLY	380/440V - 3PH - 50/60Hz

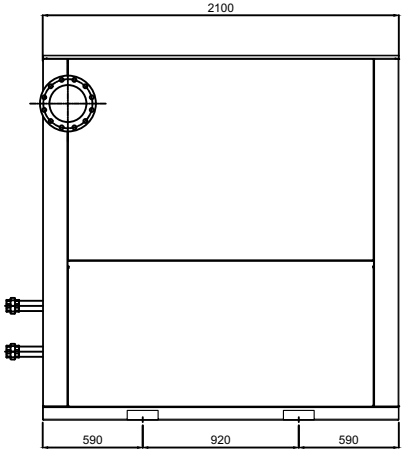

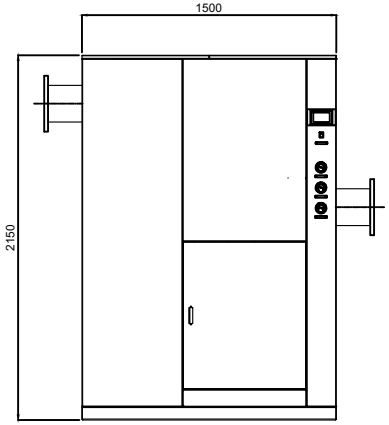

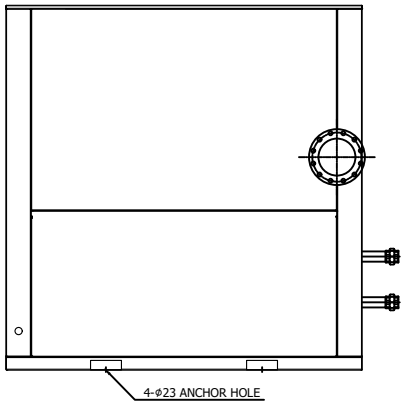

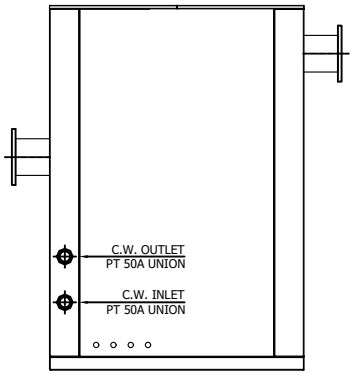

REV. NO.	DATE	DESCRIPTION	DWG	CHK	APP'D	APP'D
1	2020. 09. 28.	ISSUED FOR REFERENCE				

PROJECT

-

MANUFACTURER

GSA Global Standard Air & Gas

TITLE

OUTLINE DRAWING

ITEM NO.	HYD-800HTW	DWG NO.	REV.
SCALE	NONE	GSA-HYD-0800HTW-01	1

(A4 : 297mm x 210mm)

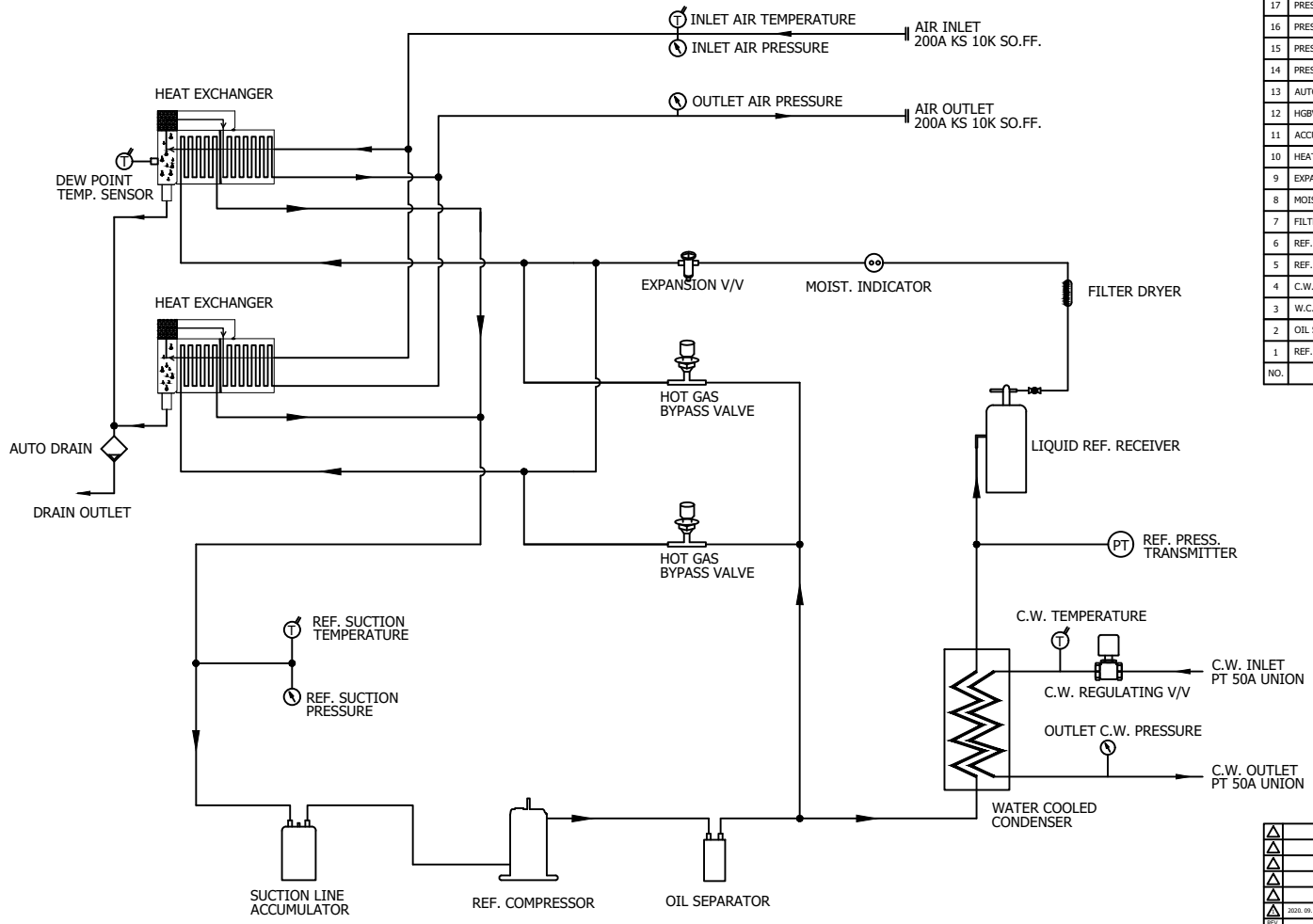

DEW POINT	2~10°C @ PDP	
INLET AIR PRESSURE	7.0 barg	
INLET AIR TEMPERATURE	45°C	
CAPACITY	120 Nm³/min	

NO.	PART NAME	DESCRIPTION	QTY
17	PRESS. GAUGE	COOLING WATER	1
16	PRESS. GAUGE	OUTLET AIR	1
15	PRESS. GAUGE	INLET AIR	1
14	PRESS. GAUGE	REF. SUCTION	1
13	AUTO DRAIN	PT 15A	1
12	HGBV	-	2
11	ACCUMULATOR	-	1
10	HEAT EXCHANGER	400 HP	2
9	EXPANSION VALVE	25 TON	1
8	MOIST. INDICATOR	7/8"	1
7	FILTER DRYER	7/8"	1
6	REF. RECEIVER	-	1
5	REF. PRESS. TRANSMIT.	-1 ~ 35 BAR	1
4	C.W. REGULATING V/V	PT 50A	1
3	W.C. CONDENSER	25 HP (CONDENSING CAPACITY)	1
2	OIL SEPARATOR	-	1
1	REF. COMPRESSOR	25 HP (COOLING CAPACITY)	1

AIR INLET LINE

AIR OUTLET LINE

REF. LOW PRESS. LINE

REF. HIGH PRESS. LINE

REV NO.	DATE	DESCRIPTION	DWG	CHK	APP'D	APP'D
1	2020. 09. 28.	ISSUED FOR REFERENCE				

PROJECT: -

MANUFACTURER: GSA Global Standard Air & Gas

TITLE: PIPING & INSTRUMENTATION DRAWING

ITEM NO.	HYD-800HTW	DWG NO.	REV.
SCALE	NONE	GSA-HYD-0800HTW-02	1

(A4 : 297mm x 210mm)

DWG NO. GSA-HYD-0800HTW-02

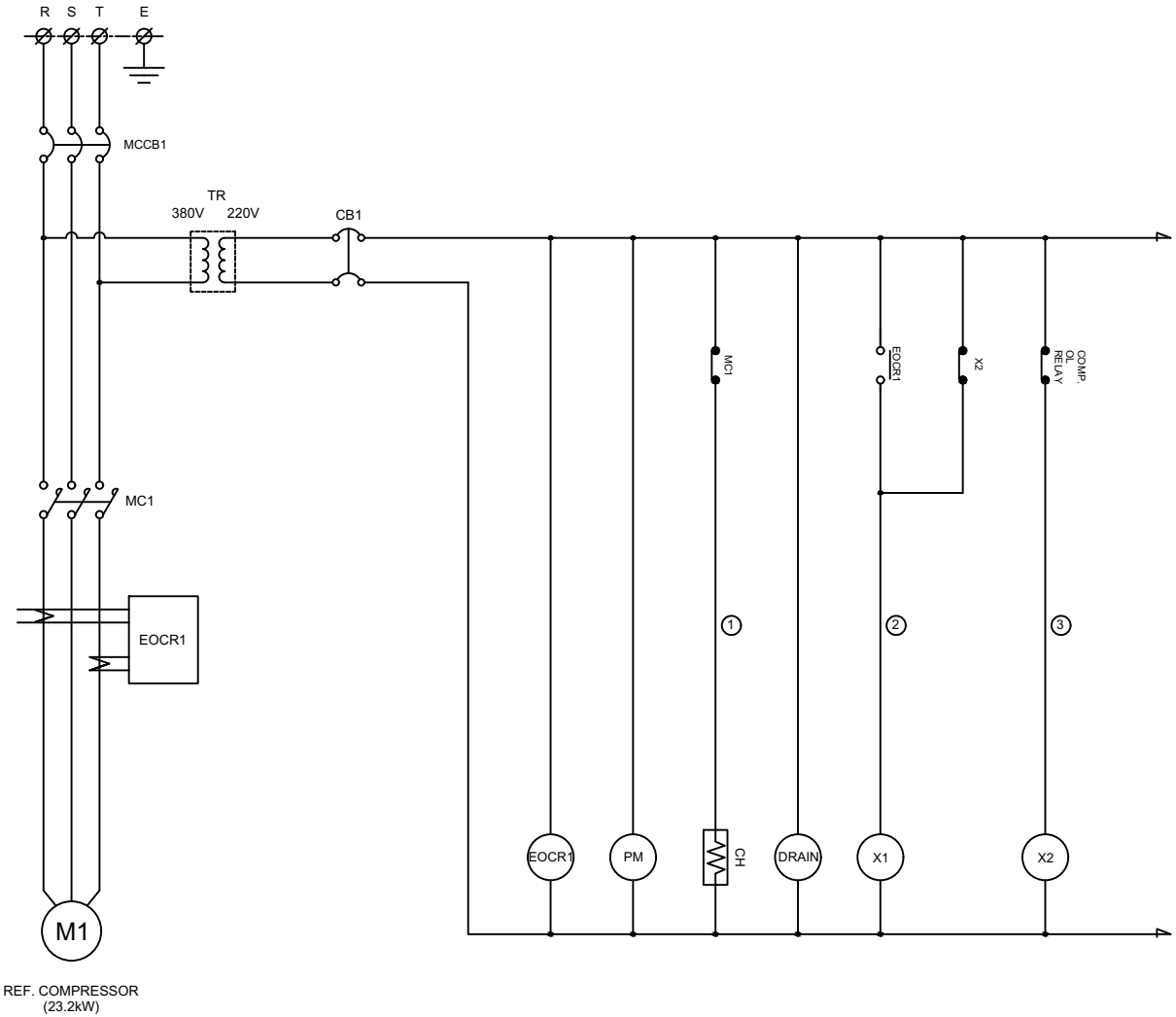

POWER SOURCE
AC 380/440V, 3Ph, 50/60Hz

NO.	SYMBOL	DESCRIPTION
12	PT1	REF. PRESSURE TRANSMITTER
11	TS1 ~ TS4	TEMP. SENSOR
10	X1, X2	RELAY
9	DRAIN	CONDENSATE WATER DRAIN
8	CH	REF. COMP. HEATER
7	PM	REF. COMP. PROTECTION MODULE
6	CB1	CIRCUIT BREAKER
5	TR	TRANSFORMER
4	EOCR1	REF. COMP. OVERLOAD RELAY
3	MC1	REF. COMP. MAGNETIC CONTACTOR
2	MCCB1	MOLDED CASE CIRCUIT BREAKER
1	M1	REF. COMPRESSOR

*REVERSE PHASE WARNING

Be sure to check the rotation direction of the fan motor and the operating condition of the refrigerant compressor.

- The fan motor must rotate clockwise.
- When the refrigerant compressor is operating, the refrigerant suction pressure will be lowered.

When operating in reverse phase, the refrigerant compressor is damaged.

In case of reverse phase, change the position of 2 wires out of 3 wires of the power supply line.

Problems caused by incorrect power connection are not guaranteed.

REV. NO.	DATE	DESCRIPTION	DWG	CHK	APP'D	APP'D
1	2020. 09. 28.	ISSUED FOR REFERENCE				

PROJECT
-

MANUFACTURER
GSA Global Standard Air & Gas

TITLE
WIRING DRAWING

ITEM NO.	HYD-800HTW	DWG NO.	REV.
SCALE	NONE	GSA-HYD-0800HTW-03_01	1

(A4 : 297mm x 210mm)

DWG NO. GSA-HYD-0800HTW-03_02

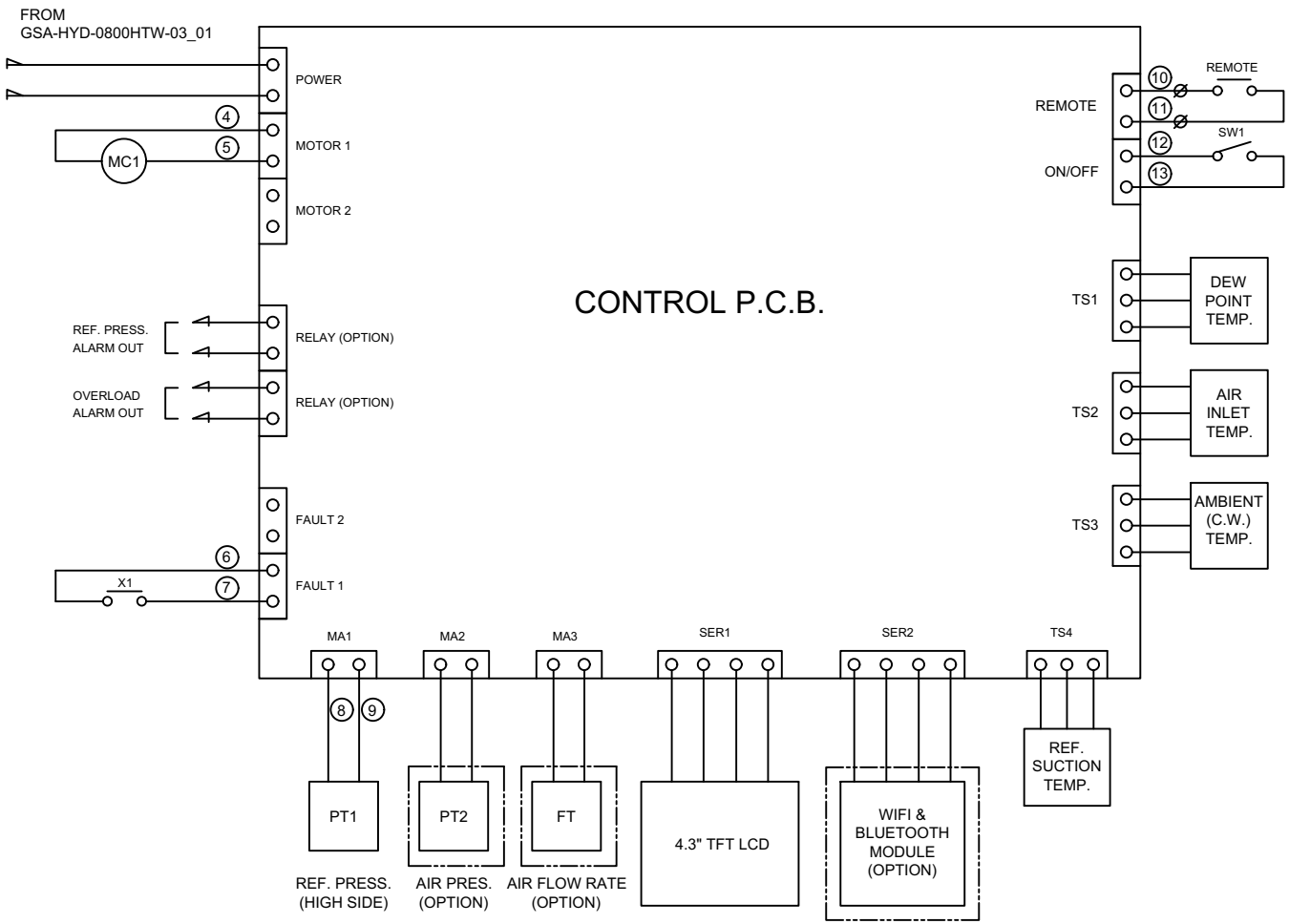

POWER SOURCE
AC 380/440V, 3Ph, 50/60Hz

NO.	SYMBOL	DESCRIPTION
12	PT1	REF. PRESSURE TRANSMITTER
11	TS1 ~ TS4	TEMP. SENSOR
10	X1, X2	RELAY
9	DRAIN	CONDENSATE WATER DRAIN
8	CH	REF. COMP. HEATER
7	PM	REF. COMP. PROTECTION MODULE
6	CB1	CIRCUIT BREAKER
5	TR	TRANSFORMER
4	EOCR1	REF. COMP. OVERLOAD RELAY
3	MC1	REF. COMP. MAGNETIC CONTACTOR
2	MCCB1	MOLDED CASE CIRCUIT BREAKER
1	M1	REF. COMPRESSOR

*REVERSE PHASE WARNING

Be sure to check the rotation direction of the fan motor and the operating condition of the refrigerant compressor.

- The fan motor must rotate clockwise.
- When the refrigerant compressor is operating, the refrigerant suction pressure will be lowered.

When operating in reverse phase, the refrigerant compressor is damaged.

In case of reverse phase, change the position of 2 wires out of 3 wires of the power supply line.

Problems caused by incorrect power connection are not guaranteed.

REV. NO.	DATE	DESCRIPTION	DWG	CHK	APP'D	APP'D	APP'D
1	2020. 09. 28.	ISSUED FOR REFERENCE					

PROJECT
-

MANUFACTURER
GSA Global Standard Air & Gas

TITLE
WIRING DRAWING

ITEM NO.	HYD-800HTW	DWG NO.	REV.
SCALE	NONE		1

(A4 : 297mm x 210mm)